E SERIES
BATTERY CHARGING STANDS

TWO COMPARTMENT ROLLER STAND SHOWN

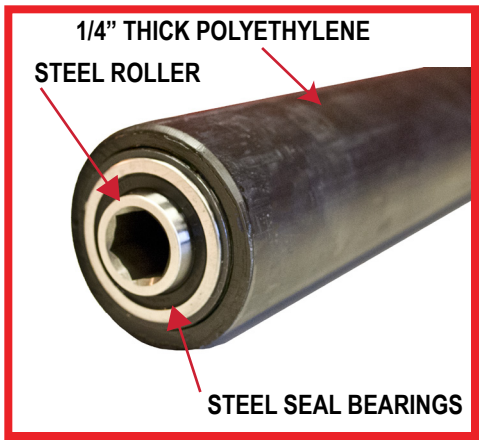

TWO COMPARTMENT ROLLER

MODEL	WIDTH	W
ECS15-2	15 1/4"	33"
ECS18-2	18"	38 1/2"
ECS21-2	15 1/4"	44 1/2"
ECS24-2	15 1/4"	50 1/2"
ECS27-2	15 1/4"	56 1/2"

THREE COMPARTMENT ROLLER

MODEL	WIDTH	W
ECS15-3	15 1/4"	48 1/2"
ECS18-3	18"	56 3/4
ECS21-3	21"	65 3/4"
ECS24-3	24"	74 3/4"
ECS27-3	27"	3 3/4"

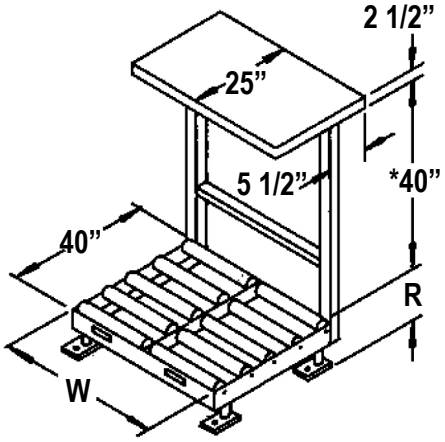

*Standard dimension of 40" unless otherwise specified
- 'R' = desired height of rollers above floor
  PLEASE SPECIFY (Min. 5 1/4")
- Adjustable Height Plus or Minus 1 1/2"
- Charger Platform 800 lb capacity
- Available without Charger Platform

ROLLER STAND
For use with Transfer Carts and Hydra-Handlers

GENERAL SPECIFICATIONS:
- 2-3/8" o.d., H.D.P. non-conductive roller.
- Sealed roller bearings.
- Structural square tubing uprights
- 40" from charger shelf to rollers.
- 11/16" hex. roller axle
- Standard Color - Visual Blue.

SACKETT
Lifting, Stacking, Storing
INNOVATING SINCE 1897

1033 Bryn Mawr Ave. • Bensenville • IL • 60106 • USA
630.766.5500 • fax 630.766.5631 • www.sackettsystems.com

© 2014 Sackett Systems **ECS0714**

ROLLER CHARGING STANDS (CS)

2 Compartment Stand

MODEL	ROLLER WIDTH	W
CS12-2	12”	26 1/2”
CS15-2	15 1/4”	33”
CS18-2	18”	38 1/2”
CS21-2	21”	44 1/2”
CS24-2	24”	50 1/2”
CS27-2	27”	56 1/2”
CS30-2	30”	62 1/2”
CS33-2	33”	68 1/2”
CS36-2	36”	74 1/2”

Feature	Measurement
Roller Bed	40” Deep
R-Dimension	5-1/4“ - 19-1/4”
R-Dimension Adjustability	+/- 1-1/2“
Battery Clearance	50”
Charger Platform	25” Deep, 800lb cap.

Specification	Measurement
Upright Size	3” x 3” x 1/8”
Legs	1” Threaded Rod
Roller Axle	11/16” Hex

STAND OPTIONS

- Less Charger Platform (LCP)
- 45” Roller Bed
- Drip Pan Brackets
- R-Dimension > 8” (High Leg Kit)
- Drip Pan Kits
- Back Stops

3 Compartment Stand

MODEL	ROLLER WIDTH	W
CS12-3	12”	38 3/4”
CS15-3	15 1/4”	48 3/4”
CS18-3	18”	56 3/4”
CS21-3	21”	65 3/4”
CS24-3	24”	74 3/4”
CS27-3	27”	83 3/4”
CS30-3	30”	92 3/4”
CS33-3	33”	101 3/4”
CS36-3	36”	110 3/4”

* Drip Pan Kit

* LCP Stand

4 Compartment Stand

MODEL	ROLLER WIDTH	W
CS12-4	12”	51”
CS15-4	15 1/4”	64”
CS18-4	18”	75”
CS21-4	21”	87”
CS24-4	24”	99”
CS27-4	27”	111”
CS30-4	30”	123”
CS33-4	33”	135”
CS36-4	36”	147”

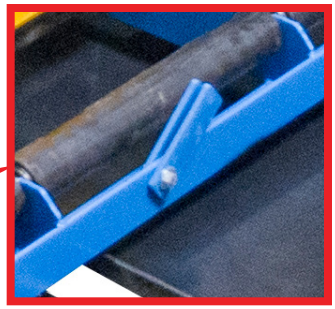

* Standard Flip-Up Stops

SACKETT
Lifting, Stacking, Storing
INNOVATING SINCE 1897

1033 Bryn Mawr Ave. • Bensenville • IL • 60106 • USA
630.766.5500 • fax 630.766.5631 • www.sackettsystems.com

© 2014 Sackett Systems **ECS0714**