MoTec® Heavy-Duty Camera Solutions

AMETEK®

Forklift truck

Motec Camera Monitor Systems for Logistics, Harbour and Industrial Applications

More safety, fewer accidents

MOTEC HEAVY-DUTY CAMERA SOLUTIONS

Motec specializes in the development and production of camera-based driver assistance systems for utility vehicles and mobile machinery.

Motec protects lives by making mobile machinery and their surroundings safer. Its cameras make operaters' work easier by reducing stress and uncomfortable physical movements. And, it helps companies become more successful by accelerating processes and avoiding damage.

Motec has over 25 years of experience in the construction and manufacture of robust, reliable mobile cameras, including the associated electronics.

Its product range includes reversing cameras, industrial cameras, displays, advanced video controllers, DVRs, customer-specific wiring looms, and wireless video transmission solutions.

Motec's customers ar leading OEMs of utility vehicles and mobile machinery for industries working in tough environments.

At its development center for utility vehicle assistance systems (MENAS) Motec develops, tests and validates software algorithms for customized driver assistance systems. Its suite of algorithms incorporates solutions for real-time image processing, aerial view projection, sensor fusion (e.g. cameras, ultrasound sensors, radar sensors, lasers), stereo view, image processing and driver assistance systems.

Motec is a unit of AMETEK Inc. a leading global manufacturer of electronic instruments and electromechanical products.

Motec camera monitor systems for the logistics area

Motec camera monitor systems support the operator of large and complex vehicles to move them safely and more efficiently, regardless of the vehicle's size. With the assistance of extremely robust heavy-duty cameras, the operator can detect people and objects within the machine's danger zone before it is too late. This way, Motec systems save lives, make working conditions easier, and save costs.

Technical service – guaranteed fast support
Top quality means also top service. When faced with difficult technical challenges or questions that need answers, Motec can assist. Its sales and engineering departments work hand in hand. Customers benefit from efficient communication with no red tape. Motec engineers understand customers processes, know what they need and can find a solution quickly.

Hotline
Phone +49 6433 9145-9888
Fax: +49 6433 9145-9877
motec.service@ametek.com

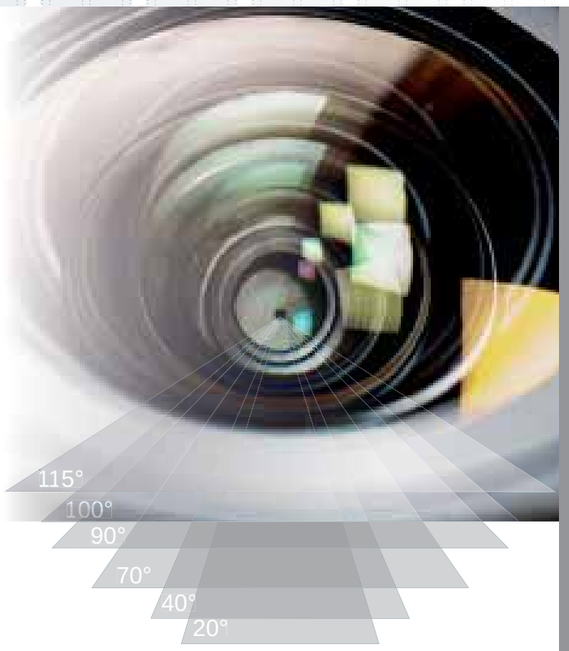

Robust modular hardware and intelligent software

- High housing protection class
- Shock- and vibration-resistant
- High temperature range
- Modular components
- In-house cable production
- Digital technology for superior image quality
- Development, validation and integration of algorithms
- Real-time image processing
- Top view projections 270°/360°
- Sensor fusion (ultrasonic/radar)
- Stereo cameras (object detection)
- Driver assistance systems (collision warning)

Contents

Reach trucks
Fork-mounted camera 4-5
Fork-shank camera 6-7
Duo camera system 8-9

High rack stacker
Duo camera system 10-11
Rear view monitoring 12-13

Forklifts
Carriage mounted camera 14-15
Rear view monitoring 16-17
Visibility of carriage way 18-19
Truck loading with image recording 20-21

Attachments – visual aids 22-23
Telescopic fork – pallet handling 24-25
270° or 360° bird´s eye view system – MVS 26-27
Radar monitoring 28-29
SmartFork® The intelligent lift truck fork 30-31
Four way sideloader 32-33
Side loader 34-35
Telescopic loader – wireless solution 36-37
Log stacker 38-39
Reach stacker 40-41
Empty container handler 42-43
Straddle carrier 44-45
Container bridge 46-47
Transport and forging manipulator 48-49
Stationary and semi-stationary applications 50-51

Product overviews
Motec cameras and monitors 52-53
Motec video control units 54
Motec transmission 54

Legal notice 55

Reach trucks

Fork-mounted camera

The loading and unloading of extremely long and deep loads in the warehouse requires precision and the driver's careful attention. A fork-mounted camera makes it possible to monitor both forks.

In order to avoid the installation of cables inside the mast, a wireless system can be installed. Digital signals provide the image transmission from camera to monitor across short or long distances. Several unit pairs operated in parallel allow high flexibility for the adaptation to a variety of forklift and visualisation problems.

The fork camera on the reach truck allows the view onto both forks.

EXAMPLE OF SYSTEM:

Fork-mounted camera

1	2	3
MD3071A **Heavy-duty monitor**	**MAB1000-Set-2 (incl. batteries)** **Digital wireless system**	**MC9050** **Fork-mounted camera**

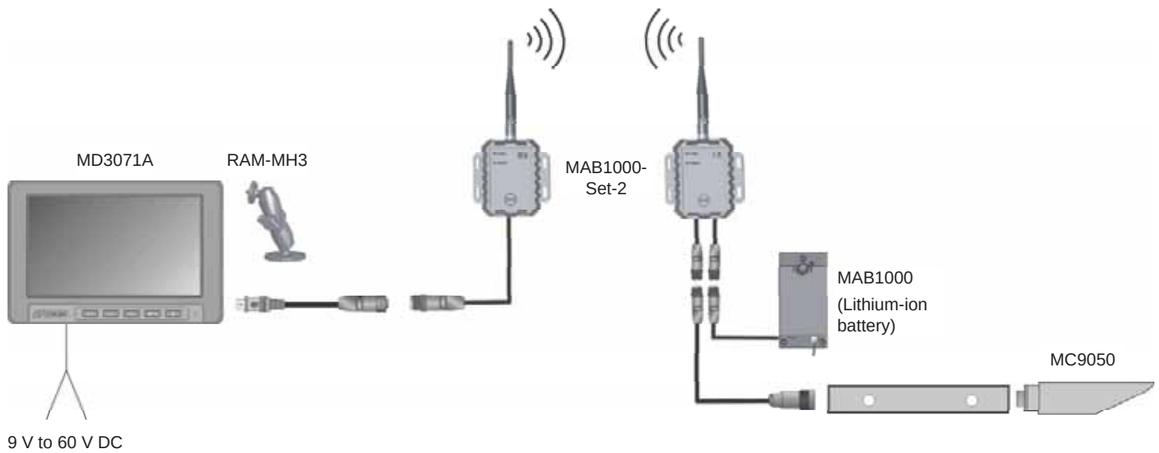

Reach trucks

Fork shank camera

Compared to the add-on fork-mounted camera, the rugged and compact MC9150 is mounted to the back of the fork. This provides the best protection for the camera against shocks and impacts. The 3 mm pinhole lens is also protected to prevent damages caused by pallet cages or pallets due to a pinhole opening.

The 50° angle of view provides an unobstructed view onto both forks facilitating the loading and unloading of goods.

Increased safety when used at high lifting heights and in poorly visible positions, thanks to Motec camera systems.

Protected installation position of the fork shank camera.

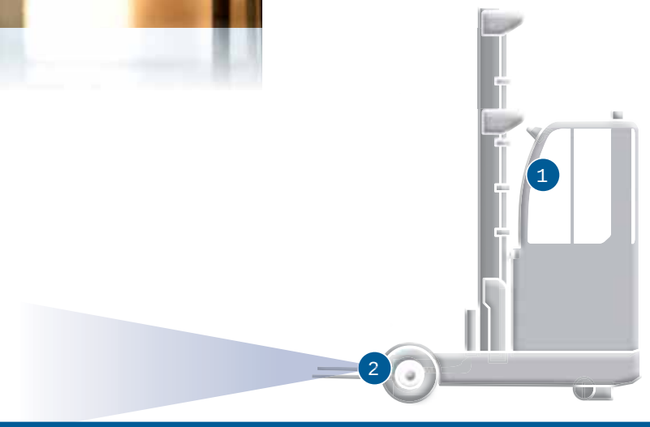

EXAMPLE OF SYSTEM:

Fork shank camera

1		2
MD3071A **Heavy-duty monitor**	**Mast cable** **MK554**	**MC9150** **Fork shank camera**

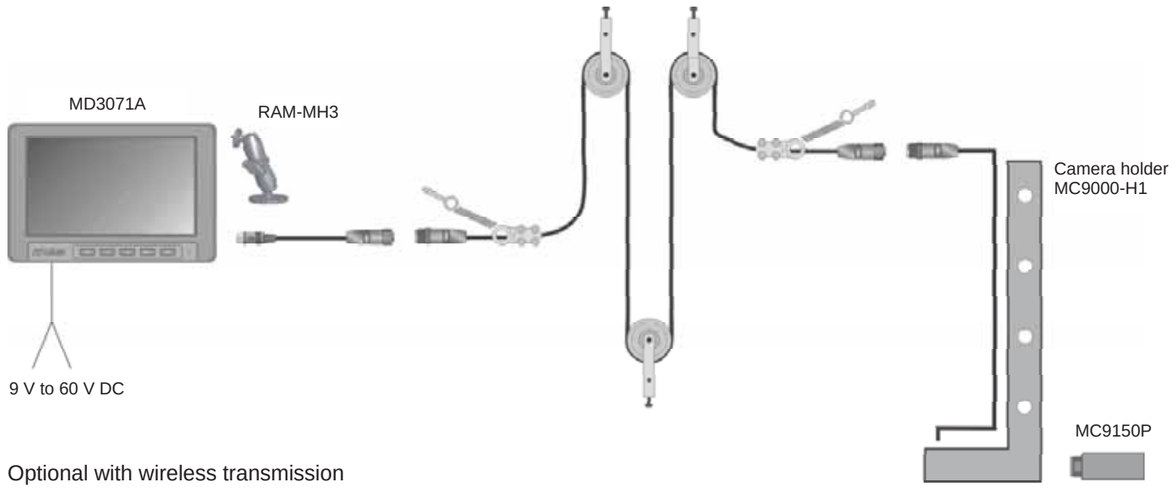

Optional with wireless transmission

Reach trucks

Duo camera system

2 cameras, fixed to the inside mast, also allow the view to the outer right- and left-hand side of the pallet. Both camera images are displayed simultaneously on the monitor (split-screen mode).

The operator can visualise both forks and can see the area below and to the side of the forks or load.

Cameras allow simultaneous viewing of the outer left- and right-hand side of the pallet.

EXAMPLE:

Duo camera system

1 MD3100 Heavy-duty monitor

Duo mast cable MK701

2 MC3000B Heavy-duty camera

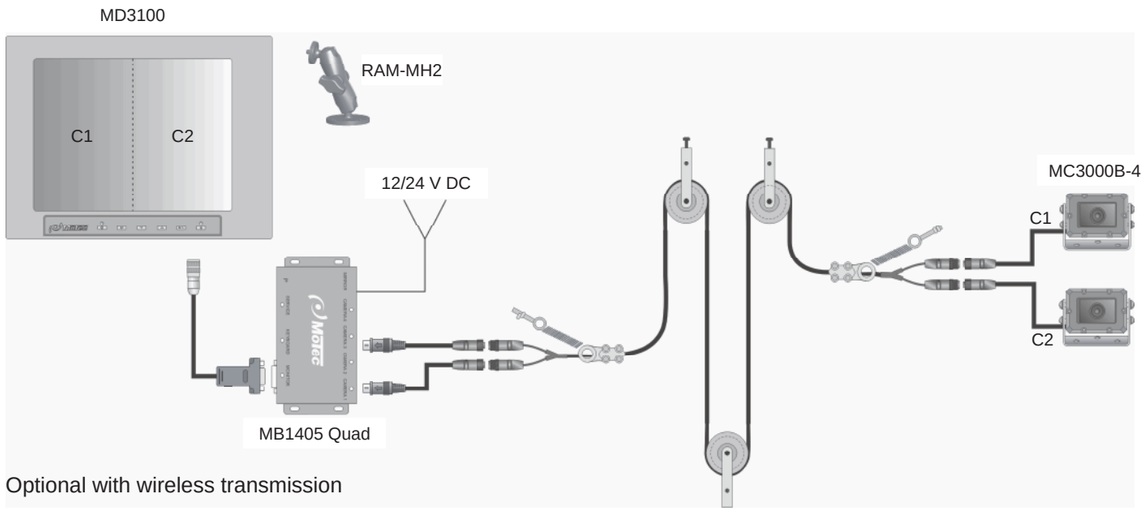

Optional with wireless transmission

High rack stackers

Duo camera system

2 cameras – one on the fork shank and one on the fork carrier – allow a simultaneous view onto the fork, as well as onto the load and the overhead rack crossbeam.

Both camera images are displayed simultaneously on the monitor (split-screen mode).

MC3000B on the fork carrier of a high-rack forklift.

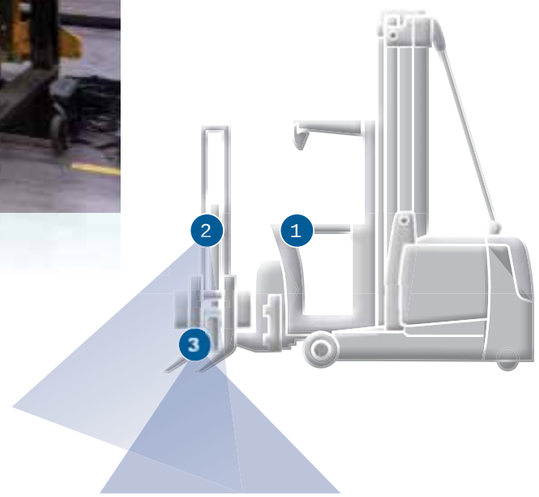

EXAMPLE OF SYSTEM:

Duo camera system

1		2	3
MD3072B Quad **Heavy-duty monitor**	**Duo mast cable** **MK701**	**MC3000B** **Heavy-duty camera**	**MC9150** **Fork shank camera**

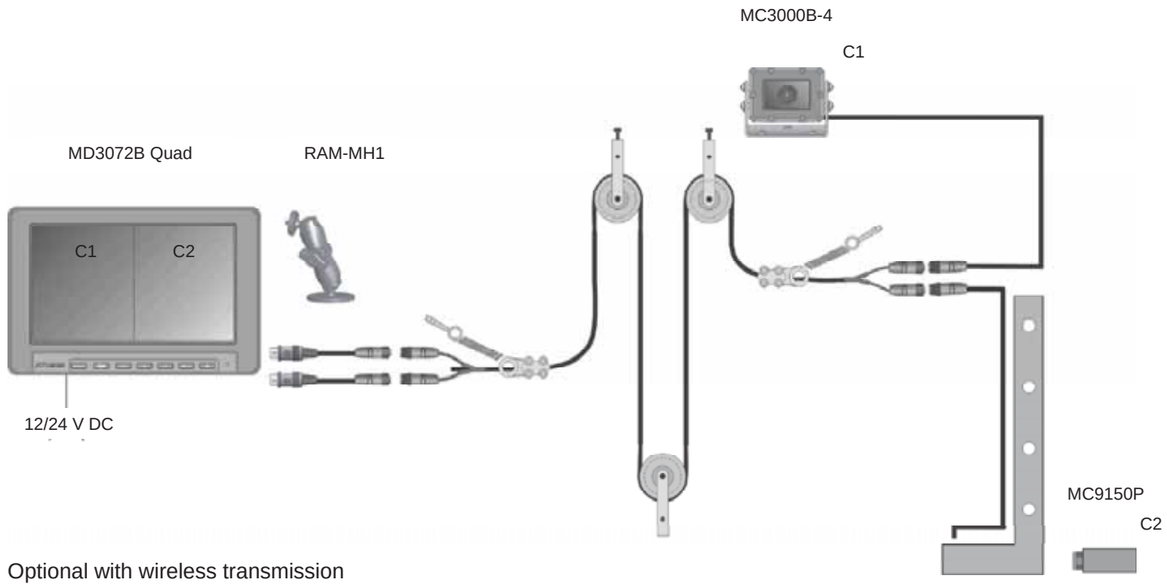

Optional with wireless transmission

High rack stackers

Rear view monitoring

High rack stackers use a camera that is attached to the rear mast. The camera is activated automatically as soon as the driver engages the reverse gear. This way, people and objects behind the forklift truck are detected in time and accidents are avoided. This makes it also easier to judge distances to stored goods and racking so that material damage is less frequent.

Ergonomic advantage: the driver sees the rear area without having to turn around, which protects the driver's back and neck.

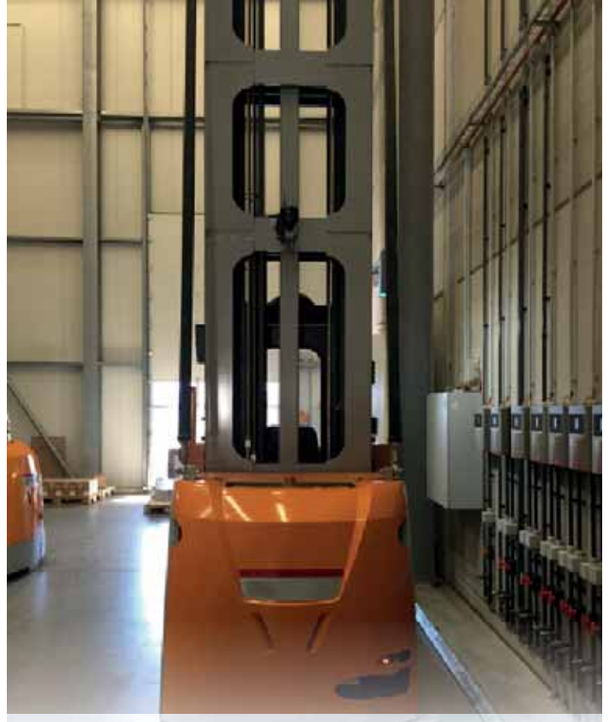

Camera mounted to the rear mast.

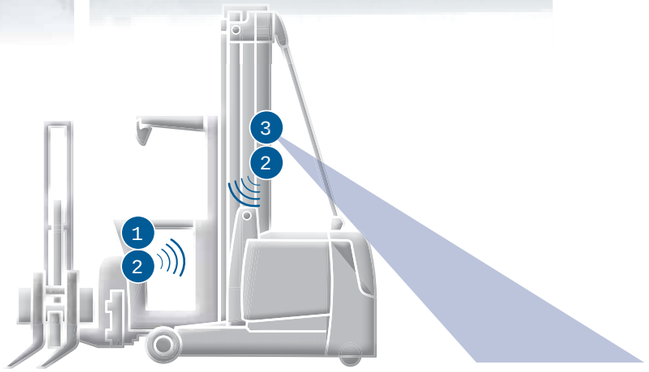

EXAMPLE OF SYSTEM:

Rear view monitoring

1	2	3
MD3071A **Heavy-duty monitor**	**KIT-MVRD1000** **Digital wireless system**	**MC7000P** **Heavy-duty camera**

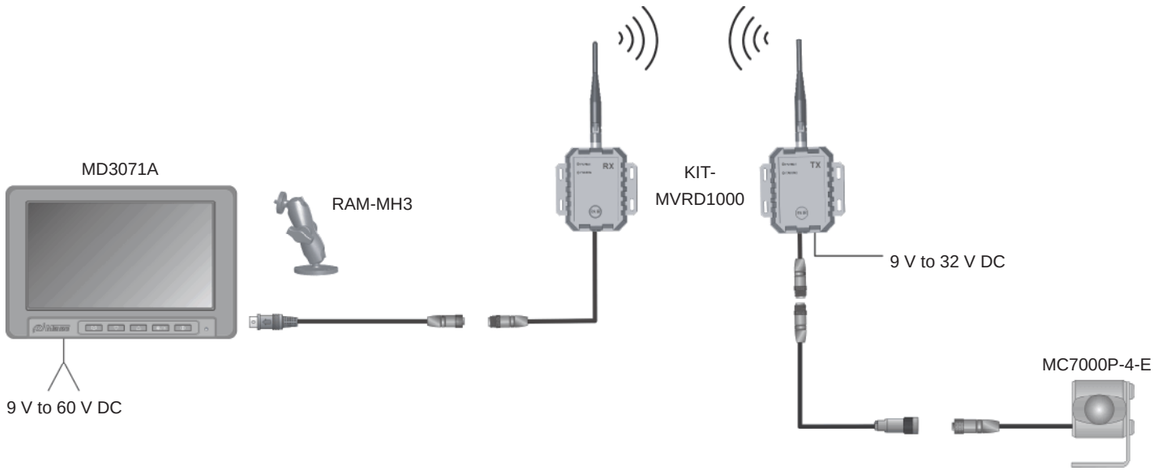

Forklifts

Carriage mounted camera

The fork carrier camera provides the operator with an optimal view onto the forks and the area in front/underneath his vehicle. This allows a safe access into a variety of load carriers. In addition, the camera provides an indirect view of the area in front of the truck.

The system can be extended by a camera that is automatically activated when reversing the vehicle.

A carriage mounted camera is lifted simultaneously with the load.

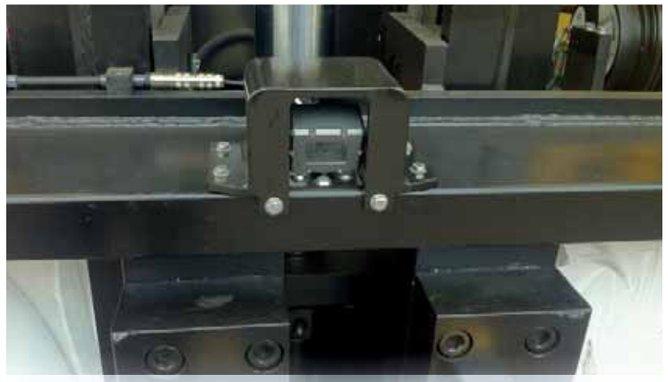

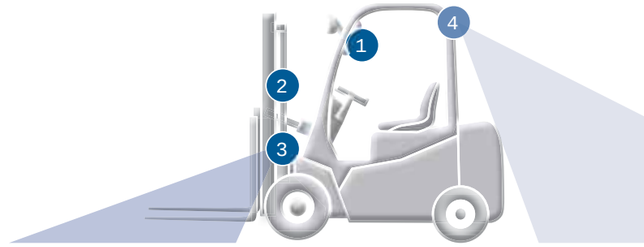

EXAMPLE OF SYSTEM:

Fork carriage camera system

1 MD3071A Heavy-duty monitor

2 FLT-cable drum

3 MC3000B Heavy-duty camera

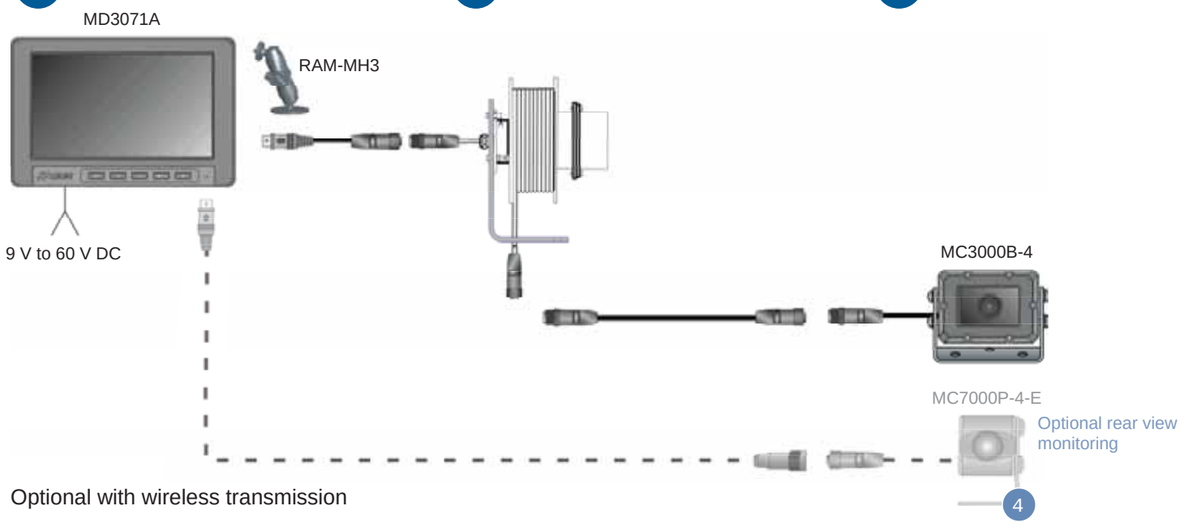

Optional with wireless transmission

Forklifts

Rear view monitoring – safe and ergonomic

A camera at the rear – optionally with an angle of 115° or 180° – is automatically activated as soon as the truck is shifted into reverse. This way, people and objects behind the forklift truck are detected in time and accidents are avoided. This makes it also easier to judge distances to stored goods and racking so that material damage is less frequent.

Ergonomic advantage: the driver sees the rear area without having to turn around, which protects the driver's back and neck.

MC7000P for rear view monitoring.

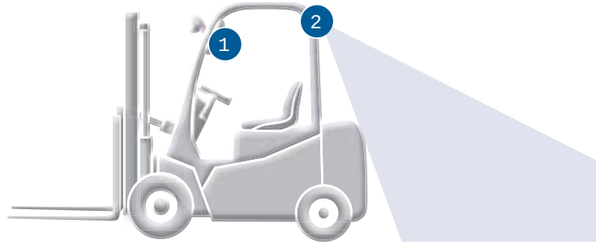

EXAMPLE OF SYSTEM:

Rear view monitoring

1 MD3071A
Heavy-duty monitor

2 MC7000P
Heavy-duty camera

Forklifts

Visibility of carriage way

Large volume loads, e.g. in the beverage industry, block the driver's view to the front of the vehicle. A camera on the mast allows the operator to look ahead of the forklift truck into the storage aisle. This way, the driver can observe people in the lift truck's path and can detect objects and obstacles in front of his vehicle well ahead of time.

The system can be extended by a camera that is automatically activated when reversing the vehicle.

Significantly increased safety in the storage aisles:
Without the lifting mast camera, a person behind the load would be difficult to see.

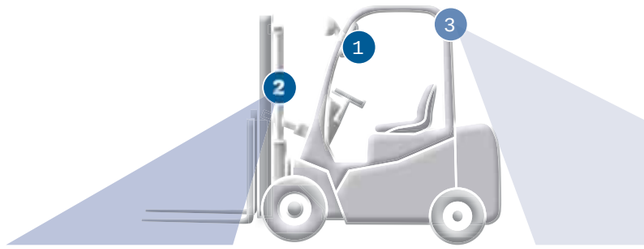

EXAMPLE OF SYSTEM:

Visibility of carriage way

MD3071A
Heavy-duty monitor
1

MC3000B
Heavy-duty camera
2

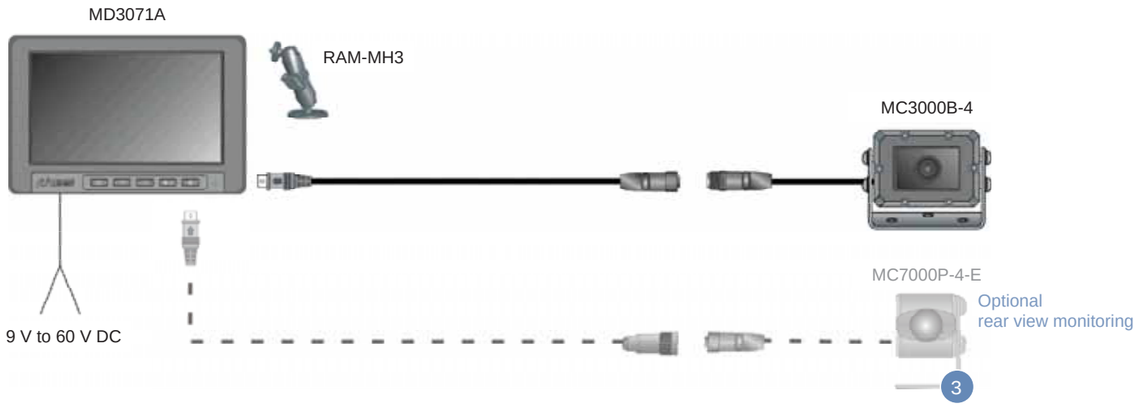

Forklifts

Truck loading with image recording

A camera mounted on the mast allows you to look underneath the lift truck forks, directly onto the load or loading edge.

In addition, a WLAN-capable digital recorder with a recording capacity of up to 5 days can be connected. A live view and recording of the images are possible simultaneously. Recording takes place at the push of a button and can be event- or time-controlled.

The system can be extended by an automatically activated rear view camera to detect other vehicles or persons in the danger area.

Camera-assisted truck loading.

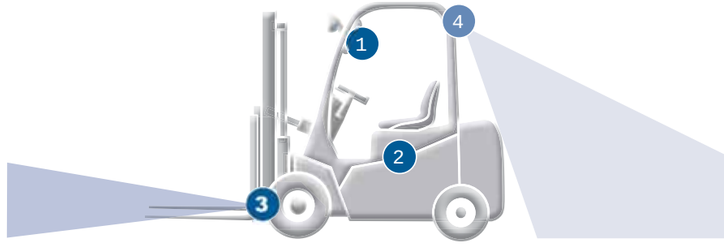

EXAMPLE OF SYSTEM:

Image recording

1 MD3071A Heavy-duty monitor	2 Digital recorder	3 MC3000B Heavy-duty camera

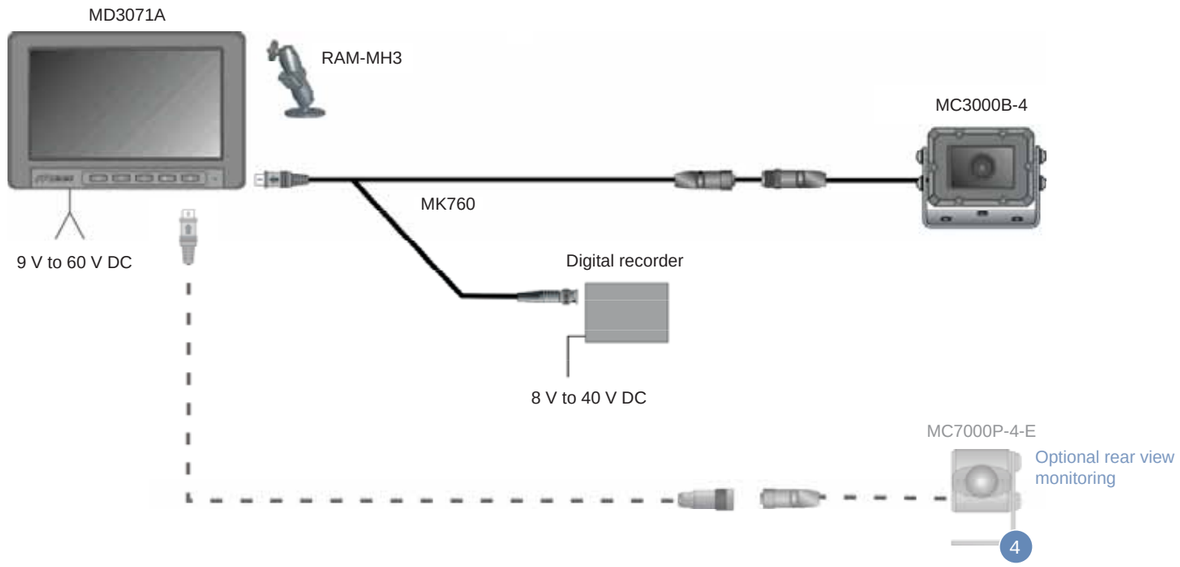

Attachments

Visual aids for rotators, paper roll clamps and multi-contact clamps

Bulky loads, e.g. rolls used in the paper industry or rotators in, obscure the view forward. Special system solutions effectively support the driver when manoeuvring load in the storage aisle and when positioning an attachment or a truck lift fork.

The safety risk for man and machine is reduced to a minimum and the efficiency is increased.

The camera allows visibility ahead of or below the load.

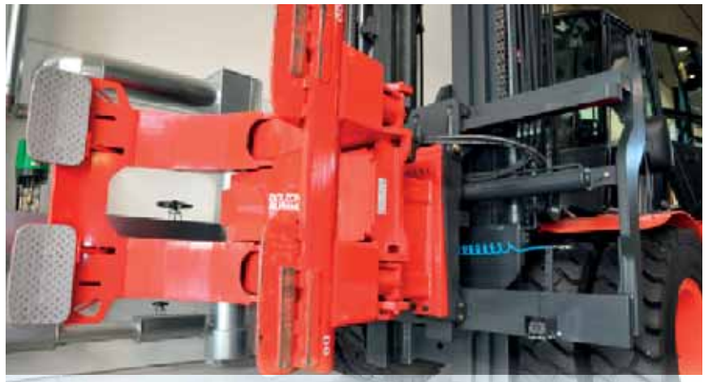

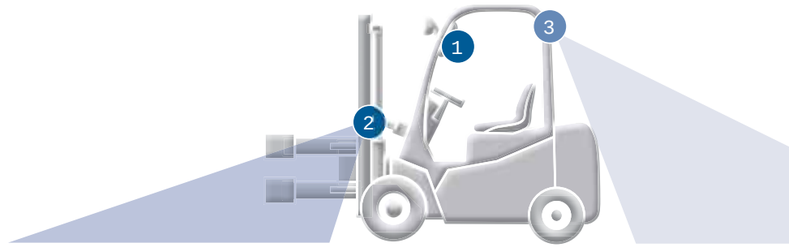

EXAMPLE OF SYSTEM:

Attachments

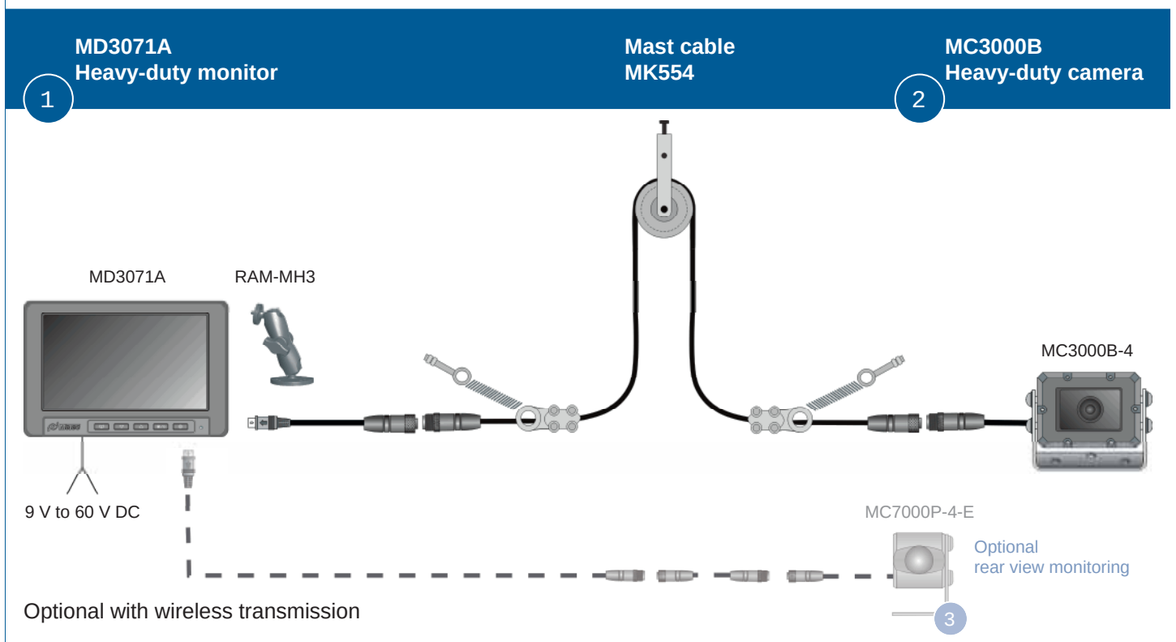

Telescopic fork

Handling of pallets

Attached to the inside of the telecopic fork, the camera is well protected and always at the level of the lift truck fork. Due to the 50° angle of view, the driver has a secure view of both the forks and the void entry points of the pallets.

Motec cameras are designed to increase the safety during loading and unloading of goods. Thanks to the LED power light, the safe loading and unloading is assured even under poor light conditions.

MC9150 on telescopic forks.

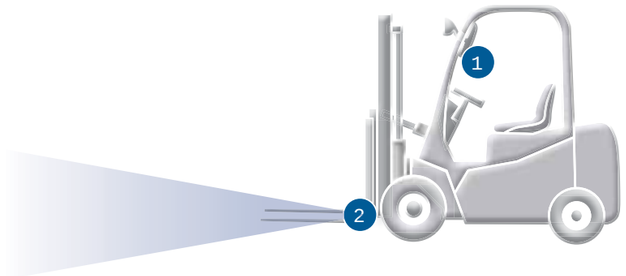

EXAMPLE OF SYSTEM:

Telescopic fork

1 MD3071A Heavy-duty monitor	Mast cable MK554	2 MC9150 Heavy-duty camera

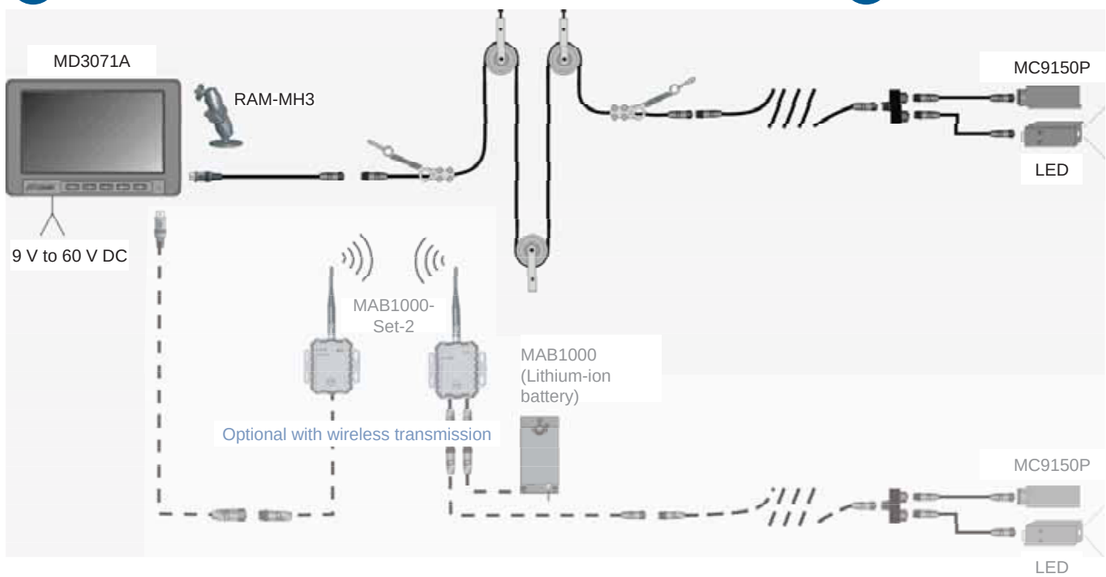

270° or 360° bird’s eye view system

MVS – Mobile Vicinity Scout

The Motec Mobile Vicinity Scout (MVS) is a camera system especially designed for heavy-duty vehicles. It provides the driver with a clear, seamless 270° or 360° view around their vehicle, thereby saving lives, assisting people, and reducing costs.

Crystal clear, intuitive bird's eye perspective of the vehicle's surroundings. Specially developed for heavy-duty applications and vehicles – flexible, adaptable, reliable. Customised, dynamic overlays. Can be extended through ultrasonic or radar sensors. Simple end-of-line and in-field calibration. Can be integrated into the electronic system of the vehicle by way of various types of interfaces (Ethernet, CAN bus, control cables).

MVS system:
MC3000B as optional fork carrier camera.
Wide-angle camera MC7180-N for lateral and rear view monitoring.

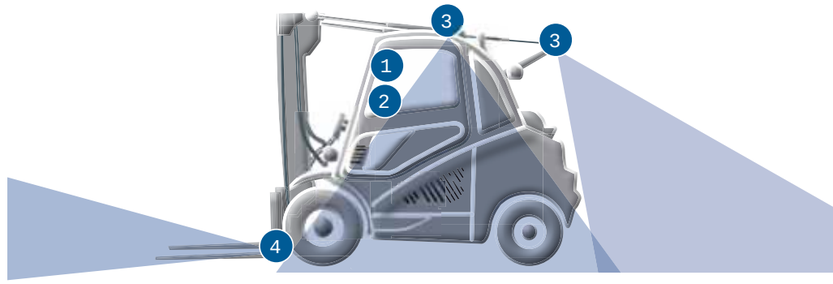

EXAMPLE OF SYSTEM:

MVS 270° System

1	2	3	4
MD3071A Heavy-duty monitor	**MVCD1000** Video control unit	**MC7180N** Wide angle camera	**MC3000B** Heavy-duty camera

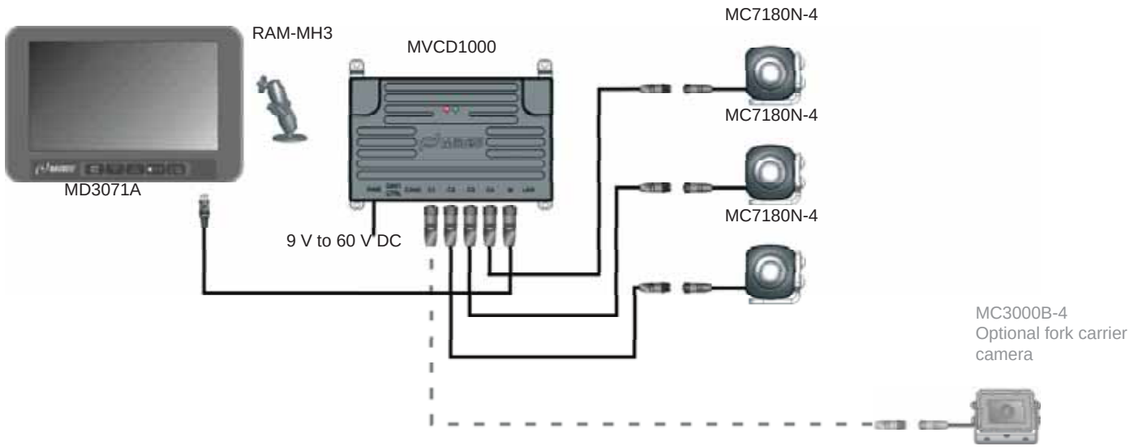

Radar monitoring

Driver assistance systems for industrial trucks

In order to monitor the entire rear area of a machine, an increasing amount of sensors, such as radar, are used in addition to imaging systems. Radar sensors increase collision protection under poor visibility conditions and can withstand various weather conditions due to their rugged construction.

The detection range of the Motec radar sensor covers a distance of up to 50 meters and a horizontal detection angle of 150°. The visual distance display can be adjusted individually – traffic lights, direction signs, distance values or warning symbols can be integrated.

Cameras and radar sensors compliment each other and guarantee increased safety.

EXAMPLE OF SYSTEM:

Radar monitoring

1	2	3	4
MD3071A **Heavy-duty monitor**	**MVCD1000** **Video control unit**	**MC7000P** **Heavy-duty camera**	**MRS** **Radar sensor**

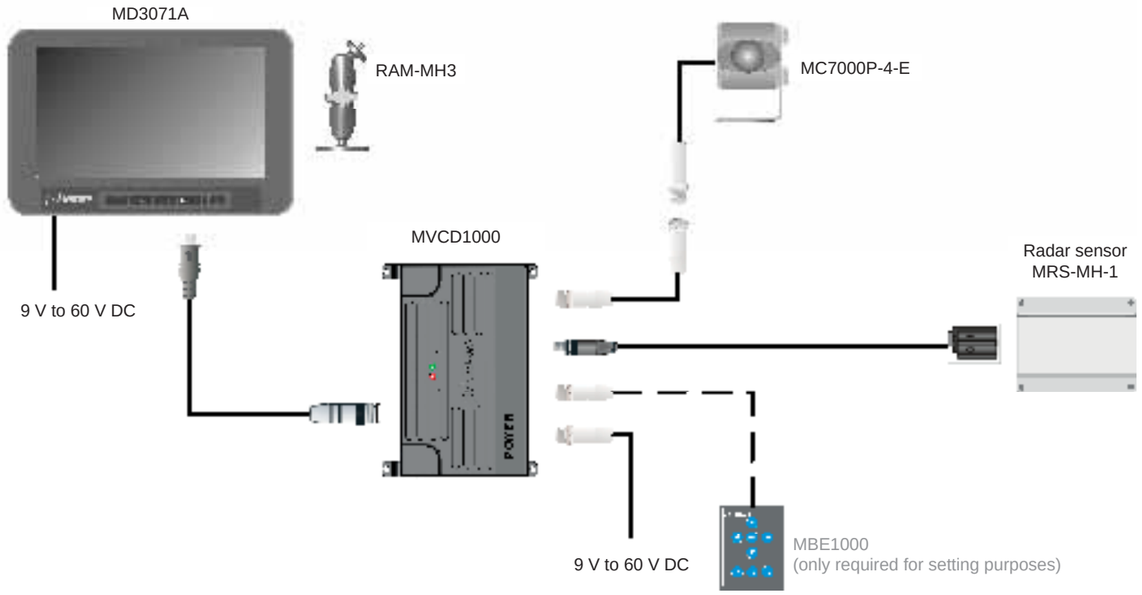

SmartFork® The intelligent lift truck fork

Counterbalance truck/reach trucks with sensor system integrated in the tip of the lift truck fork

The camera and the sensor system are integrated into the fork tip and are thus protected against mechanical damage. The driver has an unobstructed view of the load both in front and above the fork.

SmartFork®, the intelligent complete solution combines camera technology with ultrasonic, laser and inclination sensor system. An LED light, mounted next to the camera and optimally adjusted to the light sensitivity of the camera, improves visibility in poorly lit working environments.

In cooperation with Vetter Industrie GmbH.

Sensor system inside the tip of the fork

Ultrasonic sensor

Ideal for distance measurement if block stacking offset pallets is used or if obstacles are to be expected (warehouse wall, boxes, etc.). When approaching the obstacle, the distance is counted down in increments of one centimetre.

Laser sensor

If block stacking is used, the laser indicates the gap between 2 pallets. The driver recognises whether or not the second pallet is raised during pallet pick-up.

Inclination sensor

This sensor indicates the relative inclination of the forks in relation to the ground, even if the floor is bumpy or the forks are under load. Visual support of the angle of inclination using a virtual horizon.

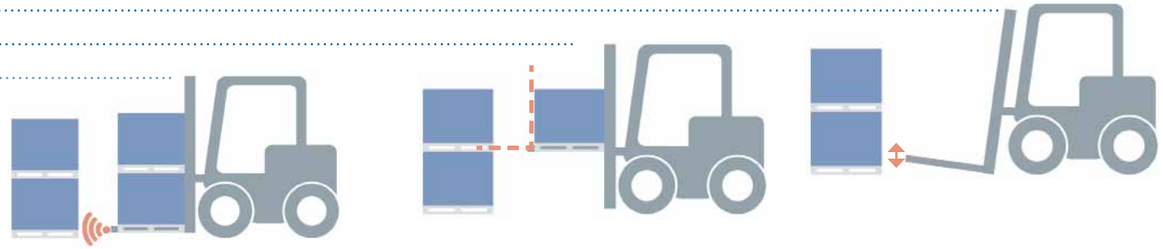

EXAMPLE OF SYSTEM:

Counterbalance truck/reach trucks

MD3071A Heavy-duty monitor	Transmission paths	MVCU1300 Video control unit	MC9250 Lift truck fork camera

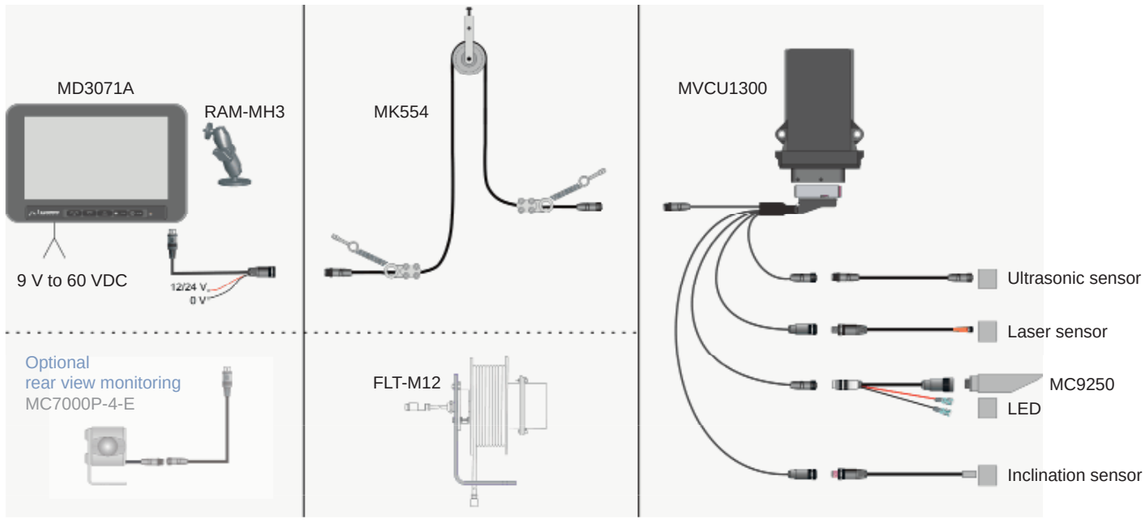

Optional with wireless transmission

Four way sideloader

Fork carrier or mast camera system

Four way sideloaders are used as conventional counterbalance trucks or especially for the transport of extremely long and deep loads in narrow storage aisles. Here, the material handling requires the utmost precision and attention from the lift truck operator.

A fork carrier or mast camera facilitates the loading and unloading of goods, providing a direct view onto the load or the forks.

Motec mast or fork carrier camera – always level with the load.

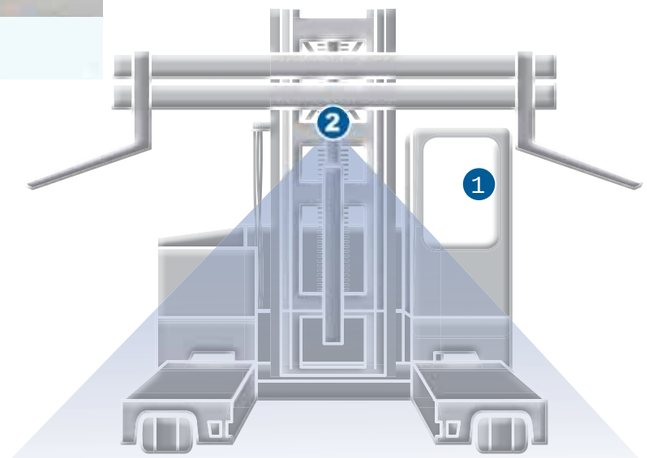

EXAMPLE OF SYSTEM:

Fork carrier or mast camera system

1		2
MD3071A **Heavy-duty monitor**	**Mast cable** **MK554**	**MC3000B** **Heavy-duty camera**

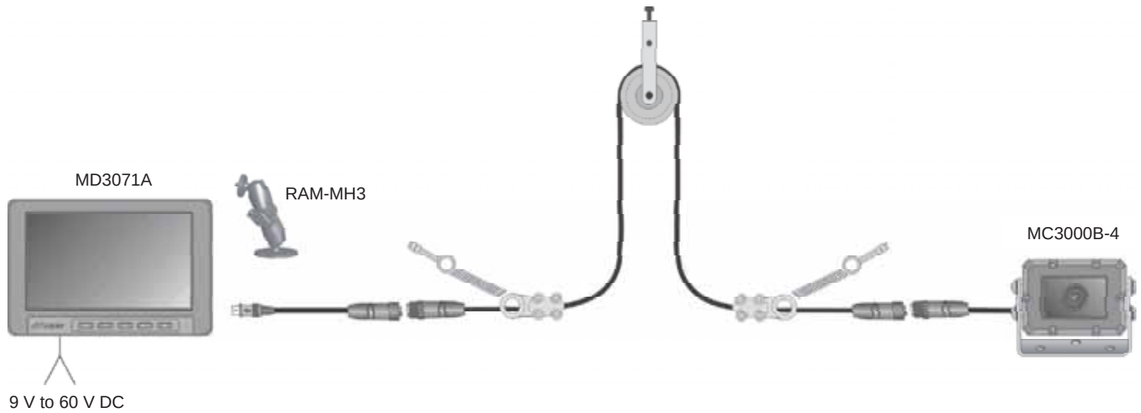

Side loader

Lateral and rear view monitoring for more safety

When used under heavy-duty conditions, side loaders enable safe and fast transport of long, bulky loads, even in narrow aisles or passages.

Rear and side cameras open the driver's view in all directions and increase safety while on the move. People and obstacles around the side loader are recognised well in time.

An optional fork carrier camera facilitates the loading and unloading of goods, providing a direct view of the load or the forks.

Reversing camera for more safety while on the move.

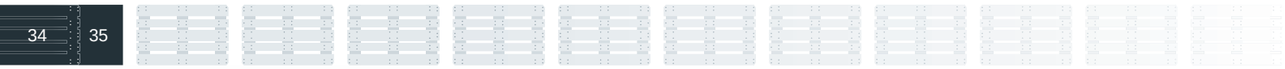

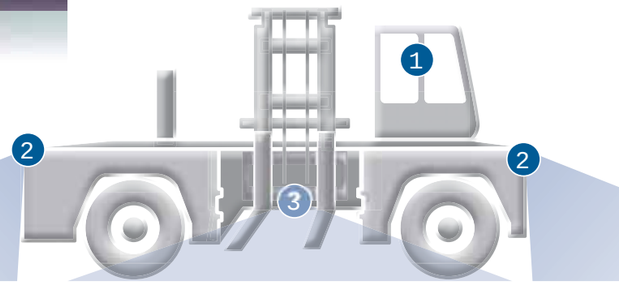

EXAMPLE OF SYSTEM:

Lateral and rear view monitoring

MD3072B Quad
Heavy-duty monitor

MC3000B
Heavy-duty camera

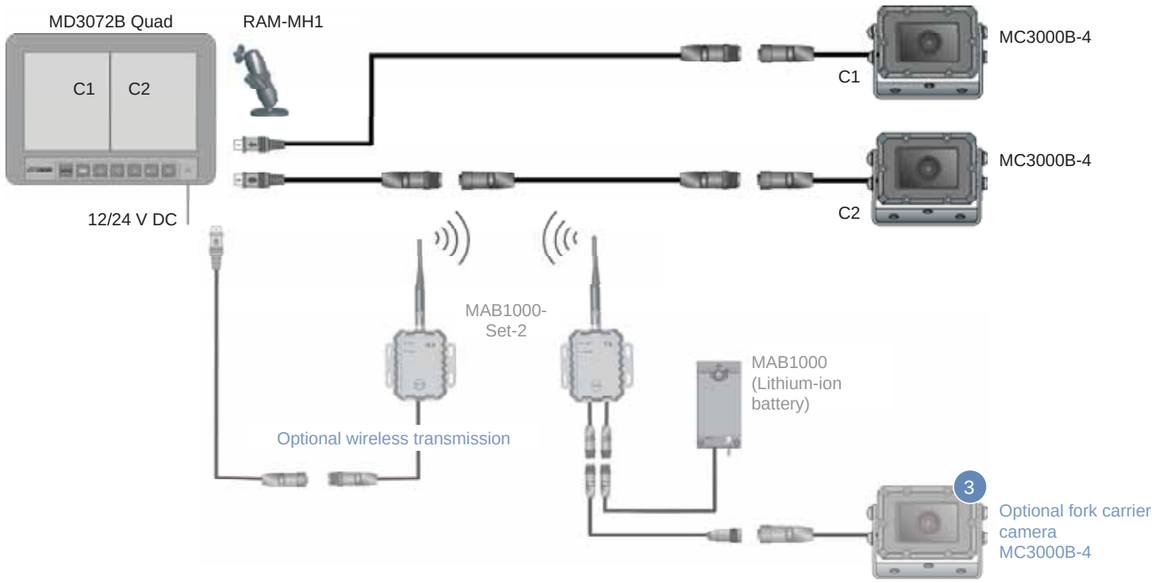

Telescopic loader

Wireless solution

Cameras on the retrieval of the telescopic handler enable the driver to view the unloading area. They facilitate the handling of pallets and material or the attachments and work platforms.

Due to various lifting heights and a wide range of payloads, wireless data transmission should be preferably used.

The system can be extended by a camera that is automatically activated when reversing the vehicle.

Telehandler with add-on device.

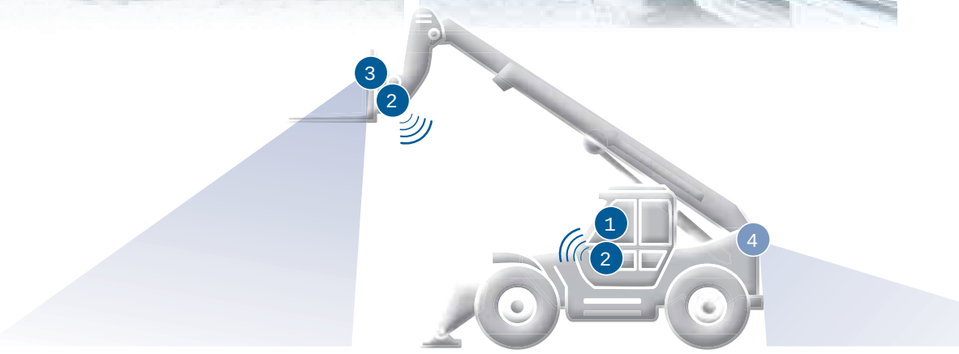

EXAMPLE OF SYSTEM:

Telescopic loader

1	2	3
MD3071A **Heavy-duty monitor**	**MAB1000-Set-2 (incl. batteries)** **Digital wireless system**	**MC7000P** **Heavy-duty camera**

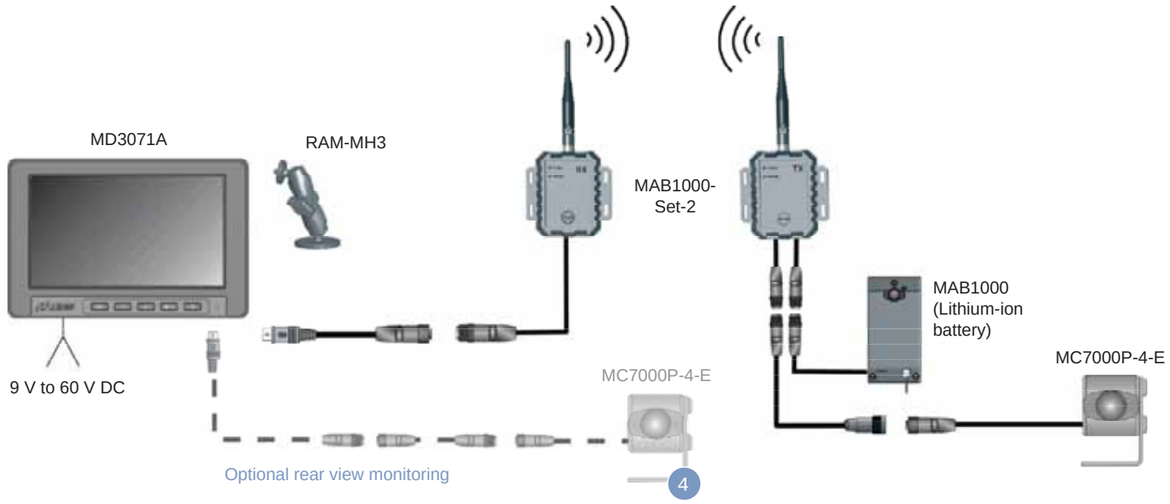

Log stacker

Efficient material handling due to wireless camera systems

Log stackers are used for mobile wood handling. When loading logs, a camera mounted above the conveyor belt transmits the images via radio to the monitor of the log stacker.

The driver always has the conveying process or the filling level in view. He can therefore detect material jams or foreign objects at an early stage and thus reduce idle times.

The system can be extended by a camera that is automatically activated when reversing the vehicle.

MC3000B for monitoring the filling level of a wood container.

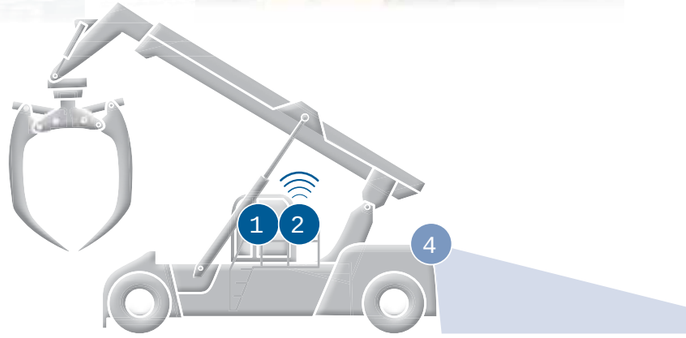

EXAMPLE OF SYSTEM:

Efficient material handling

1	2	3
MD3071A **Heavy-duty monitor**	**Kit MVRD1000** **Digital wireless system**	**MC3000B** **Heavy-duty camera**

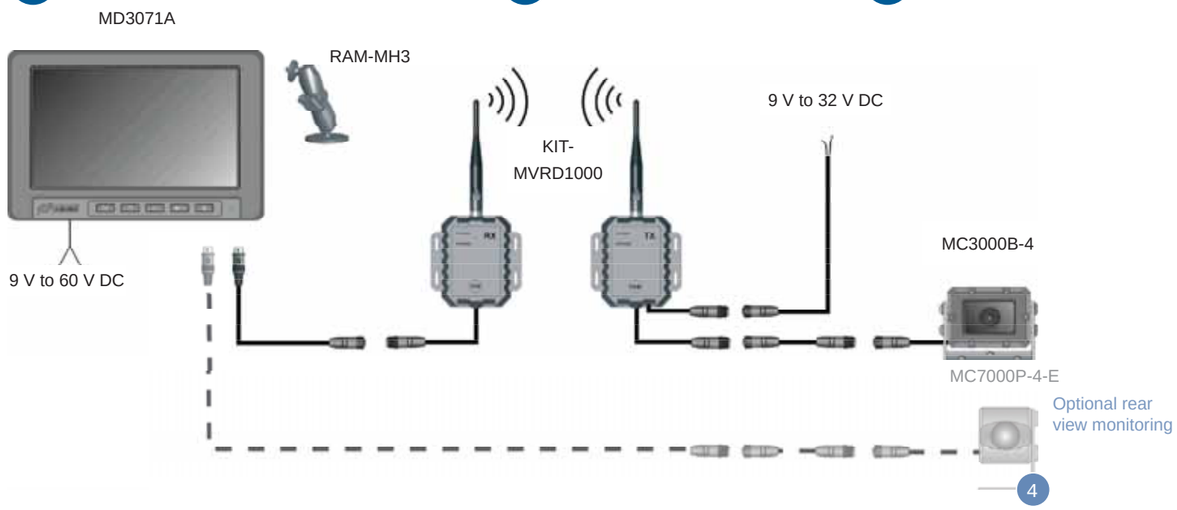

Reach stacker

Assistance during manoeuvring, twistlock and rear view monitoring during container handling

The mobility of reach stackers is limited without camera technology. Motec cameras help the driver to see the rear area as well as the path ahead of him. The cameras help to assess distances and recognise persons or obstacles in the danger area well in time.

Additional cameras on the spreader support the driver and ensure the safe handling of containers by monitoring the position of the twistlocks. Consequently, it effectively prevents accidents and saves costs through fast operating procedures.

The cameras are mounted in such a way as to provide an optimum view onto the twistlocks.

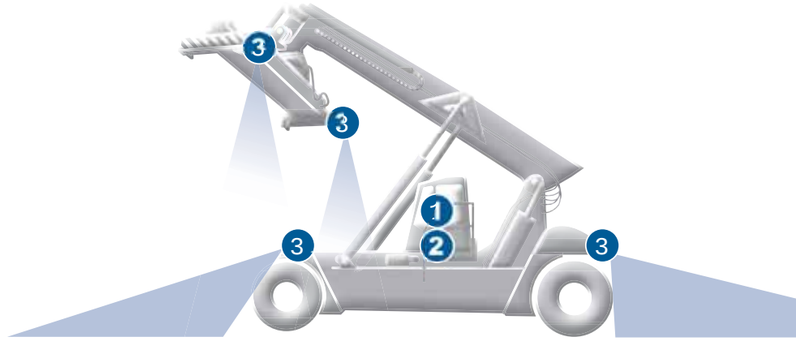

EXAMPLE OF SYSTEM:

Reach stacker

1	2	3
MD3100 **Heavy-duty monitor**	**MB1405 Quad** **Video control unit**	**MC3000B** **Heavy-duty camera**

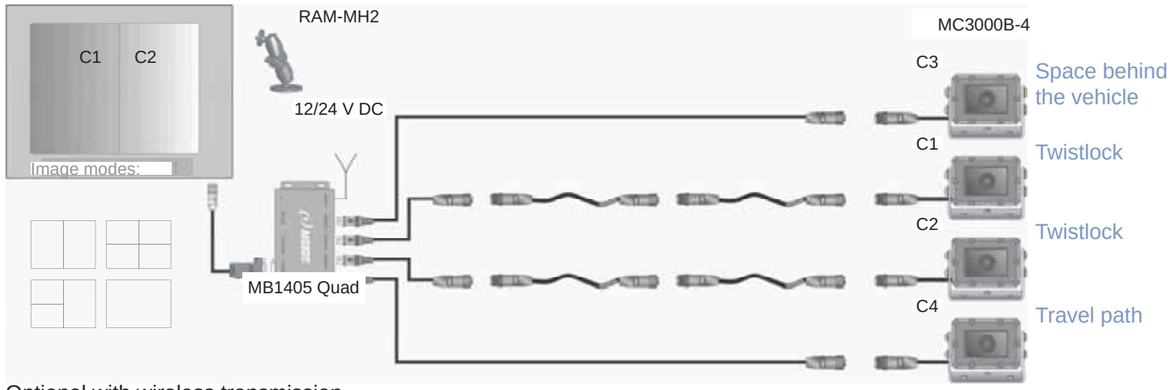

Optional with wireless transmission

Empty container handler

Container handling

The cameras support the driver when loading containers. The monitoring of the twistlocks enables a faster and more secure positioning.

The system can be extended by an automatically activated 180° rear view camera, which significantly facilitates manoeuvring processes.

Twistlock camera for safe container handling.

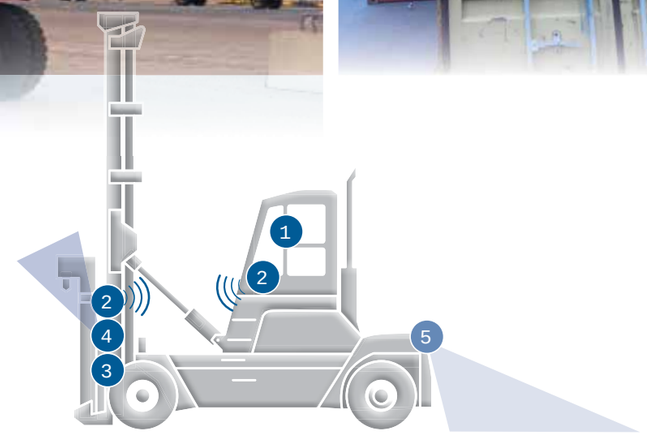

EXAMPLE OF SYSTEM:

Empty container handler

1	2	3	4
MD3071A **Heavy-duty monitor**	**Kit MVRD1000** **Digital wireless system**	**Kit MVCU1400** **Video control unit**	**MC3000B** **Heavy-duty camera**

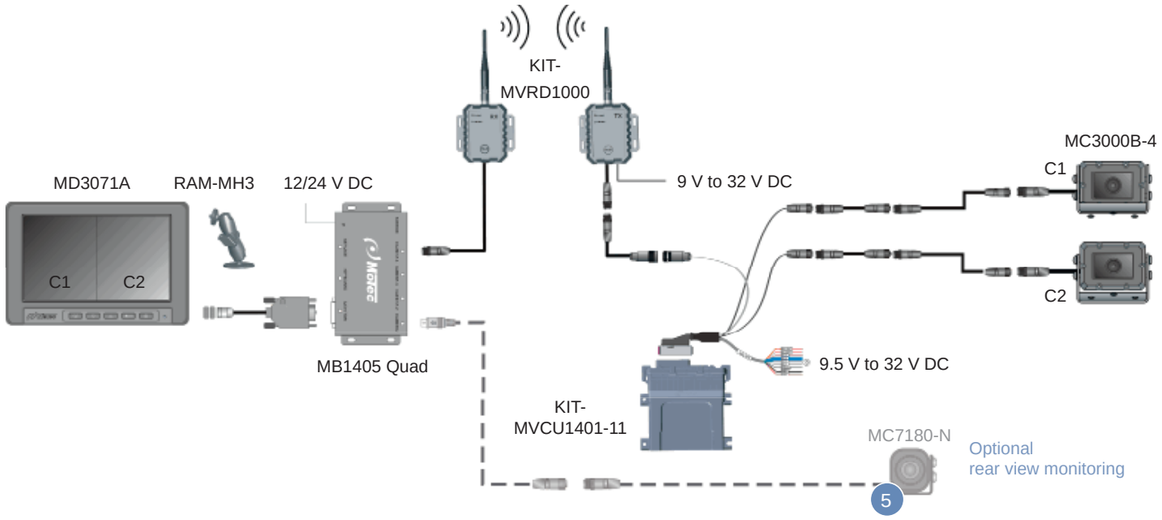

Straddle carrier

Rear view monitoring and safe and fast handling of containers

At a height of up to 15 meters, the drivers have the best view forward and into the loading zone. However, the rear view is difficult and the mast cannot be positioned precisely from that height.

Motec cameras help the driver to see the rear and lateral area. The cameras help to assess distances and recognise persons or obstacles in the danger area well in time. 2 additional cameras provide an optimal view of the twistlocks.

The images are transferred to 2 monitors so that the driver can position the containers in a millimetre-accurate manner and can safely move around.

Lateral monitoring from great heights with Motec camera monitor systems.

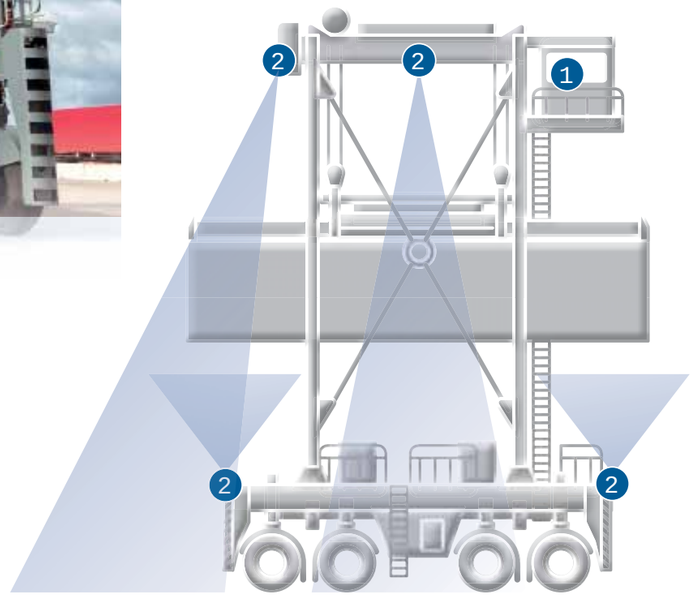

EXAMPLE OF SYSTEM:

Straddle carrier

MD3072B Quad
Heavy-duty monitor

1

MC3000B
Heavy-duty camera

2

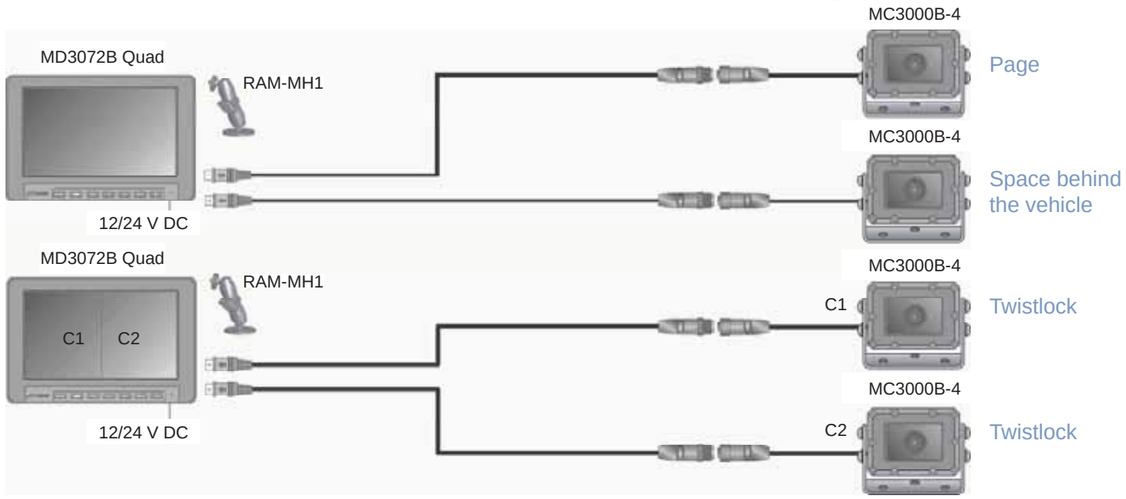

Container bridge

Container handling

Due to the design, the driver has only limited visibility to the rear and front of the vehicle. The risk of a collision with people, trucks or other obstacles is very high. An intelligent camera monitor system surveys the travel path in all directions and simultaneously displays up to 4 camera images on a single monitor. The image is transmitted via digital radio signals.

It is possible to switch the camera automatically between the front/rear area and the twistlocks.

Twistlock camera in use during container handling.

EXAMPLE OF SYSTEM:

Container bridge

1 MD3100 Heavy-duty monitor	2 KIT-VTS-1 Video data wireless system	3 MC3000B Heavy-duty camera

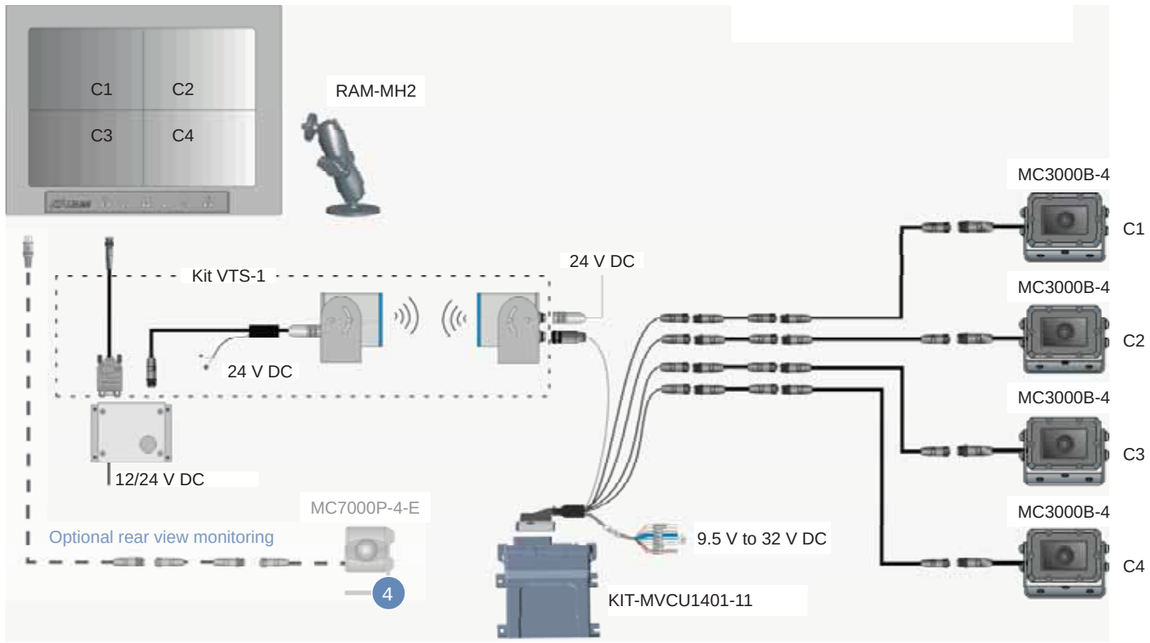

Optional image transmission via FOC (fibre optic cable).

Transport and forging manipulator

Monitoring front and rear area

Tool manipulators guide or position the setting tools on open die forging presses. Motec heavy-duty cameras provide an improved view of the vehicle's rear and front area, people and objects around the machine or in the blind spot. Thus the cameras facilitate the safe handling of heavy workpieces between furnace and press.

Rear view camera on the transport manipulator.

DANGO & DIENENTHAL Maschinenbau GmbH, Siegen, Deutschland (DDS)

EXAMPLE OF SYSTEM:

Transport manipulator

MD3071A
Heavy-duty monitor

MB1405 Quad
Video control unit

MC3000B
Heavy-duty camera

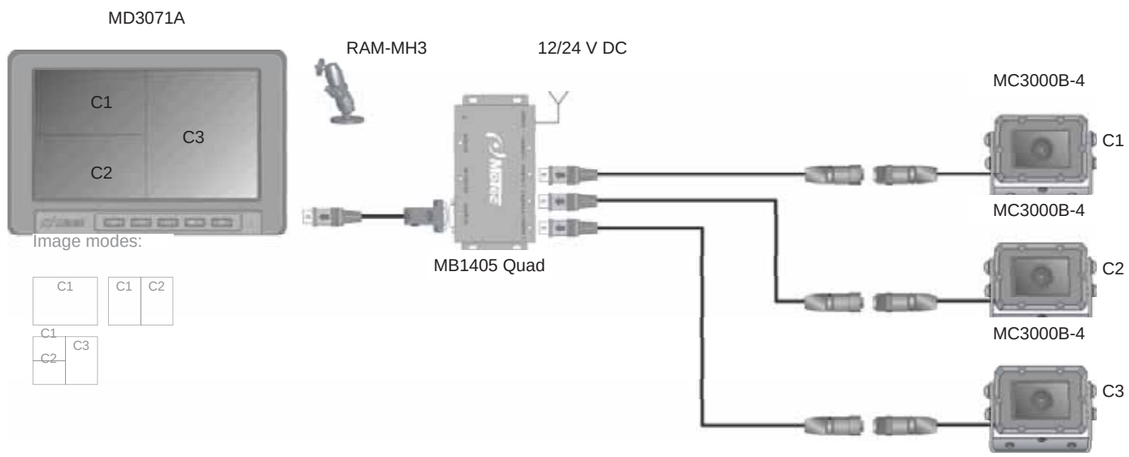

Stationary and semi-stationary applications

Example of machine tools

In order to monitor production processes, cameras are mounted to the gripper and transport container. The cameras help you to verify the correct positioning of the workpiece or semi-finished product, or to display the filling level of the transport boxes.

This allows workflows and production planning to be optimised.

Alternatively, the system can be extended by a digital wireless system. In addition, it is possible to integrate an Ethernet camera.

Camera-monitored workplace during line production.

EXAMPLE OF SYSTEM:

Stationary and semi-stationary applications

1 MD3100 Heavy-duty monitor

2 MB1405 Quad Video control unit

3 MC3000B Heavy-duty camera

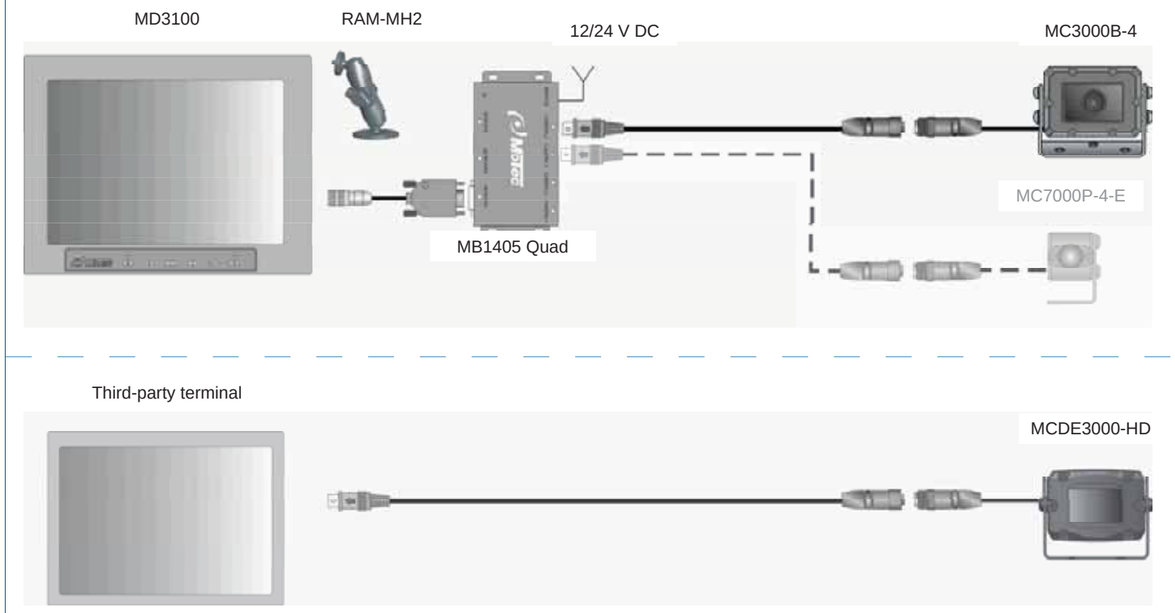

Optional with wireless transmission

Motec cameras

Overview

MC9050
Fork-mounted camera

The MC9050 is mounted to the inside of the lift truck fork. This places the camera at the eye level of the pallet. Due to the pinhole size opening in the housing, the lens is protected from damage that may be caused by lattice boxes or pallets.

MC9150P
Fork-shank camera

The MC9150P camera is mounted on the back of the fork. The 50° viewing angle makes it possible to observe both forks. Due to the pinhole size opening in the housing, the lens is protected from damage that may be caused by lattice boxes or pallets.

MC925C (with LED)
Fork-mounted camera

The MC925C fork-mounted camera is designed especially for industrial trucks and is mounted to the inside of the fork. Two LED high resolution modules enable the forklift operator to detect the forks even under poor lighting conditions. Due to the pinhole size opening in the housing, the lens is protected from damage that may be caused by lattice boxes or pallets.

MC3000B-4
Heavy-duty camera

The MC3000B reliably deals with visibility issues during rugged heavy-duty operation. Thanks to its anodised and varnished aluminium housing, it withstands even extreme weather and environmental conditions. The numerous available angles of view and plug-in connections offer a wide range of applications for utility vehicles and mobile machinery. The MC3000B is also available as EX 2 and stainless steel design.

MC7000P-4-E
Heavy-duty camera

Due to the mini module design, the MC7000P-4-E is suitable for the installation in mobile machines with limited space available. The rugged and weather-proof housing made of stainless steel allows the camera's use under extremely severe conditions. The individually adjustable lens makes it possible to install the camera vertically, horizontally, at an angle, or overhead.

MCDE3000-HD
Ethernet camera

The MCDE3000 is a mobile heavy-duty Ethernet camera and can be used in networks compliant with IEEE 802.3 (LAN). Fitted with intelligent image processing and dynamic overlays, the camera functions as a smart sensor in a variety of applications, e.g., integration into video monitoring systems or video streaming.

Motec monitors

Overview

MD3071A
Heavy-duty monitor

Based on its design and accessories, the MD3071A is a heavy-duty monitor that can be used in all industry sectors. The images of the display are crystal clear, even under the most severe environmental conditions. The option to update the software ensures that the MD3071A can be updated any time and, therefore, makes the product future-proof. The vertical design is available as MD3071A-V.

MD3072B Quad
Heavy-duty monitor

The MD3072B-Quad is designed especially for mobile machines on which several cameras are mounted. When using the integrated video control unit, the monitor can display 4 camera images simultaneously. The integrated menu function and control lines for the automatic control system of the cameras ensure the quick change of images.

MD3074A Quad
Heavy-duty monitor

The MD3074A-Quad is designed especially for mobile machines on which several cameras are mounted. When using the integrated video control unit, the monitor can display 4 camera images simultaneously. The monitor is watertight and suitable for storage monitoring due to its protection class. Like the MD3072B-Quad, the MD3074A-Quad has an integrated menu function and control lines.

MD3073
Heavy-duty monitor

The water-proof and dust-tight MD3073 has been specially developed for mobile machines and applications where moisture, cold and dust are involved, for example on construction sites or in cold rooms. The images of the display are crystal clear, even under these most severe environmental conditions.

MD3100
Heavy-duty monitor

The MD3100 is a 10.2" LCD monitor intended for industrial applications with powder-coated metal housing. Because of its size, the MD3100 is particularly suitable for displaying several camera images at the same time (in connection with a video control unit). The front of the monitor complies with the regulations of the dust and spray water protection class.

This is only just a small extract from our range of products. For a complete list, please visit: www.motec-cameras.com

Motec video control units

Overview

MVCD1000
Video control unit

The MVCD1000 is a digital heavy-duty multi camera video control unit that can process up to 4 camera images simultaneously, it can merge with additional sensor data, and can display these data via an analogue monitor output or via an Ethernet video stream.

MB1405 Quad
Video control unit

The video control unit MB1405-Quad allows the display of up to 4 camera images simultaneously in what is referred to as Quad Split Mode. The remote control supplied is used to automatically control or manually switch between the different camera images.

MVCU1400
Video control unit

The MVCU1400 is a CAN-controlled heavy-duty multi-camera video control unit. It simultaneously controls up to 4 connected cameras, processes their images and video signals, and outputs them to up to 2 monitors in the most diverse modes.

System solutions

Customised solutions for numerous other industries

. Product program
. Construction machines
. Traffic/Transport
. Agricultural machines
. Railways
. Defence
. Maritime

Transmission

Selection

Mast cable/duo mast cable

MK554/MK701

Spring cable reel

Cable length 10 metres

Wireless system MAB1000

Digital wireless system, 2.4 GHz, with additional lithium-ion battery and charger available as a set.

Miscellaneous:

Analogue wireless 5.8 GHz
FOC (fibre optic cable)
Twisted pair converter
Ethernet/BroadR-Reach

Legal notice

© Motec GmbH 2017
All data without guarantee. Errors and omissions excepted.

Images:
Motec GmbH, Fotolia.com
Title image © by Konecranes GmbH
Photo high rack forklift (page 10, 11) © by Jungheinrich AG
Photo high rack forklift (page 12, 13) © by Still GmbH
Photo log stacker (page 39, 39) © by Svetruck GmbH
Photos transport manipulator (page 48, 49) © by DANGO & DIENENTHAL Maschinenbau GmbH

Motec GmbH
Oberweyerer Straße 21
65589 Hadamar-Steinbach
GERMANY

Phone +49 6433 9145-0
Fax +49 6433 9145-45
motec.info@ametek.com
www.motec-cameras.com

100 0070 017-02/2017