Superior Arm and Pad Profile Designed to Eliminate Damage

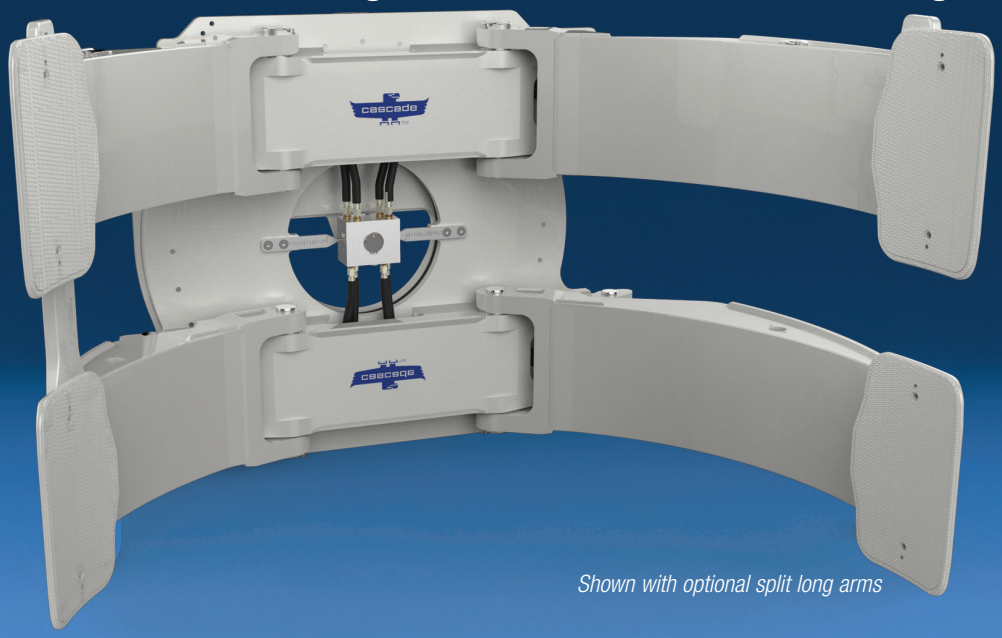

Shown with optional split long arms

Profiled arms and pads easily knife between rolls

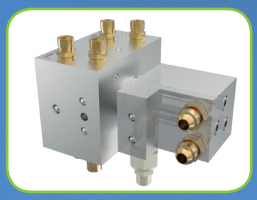

High-flow revolving connection reduces heat and energy consumption

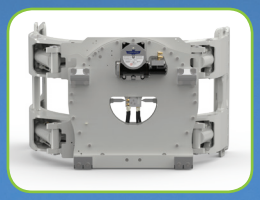

Excellent visibility facilitates second tier roll handling

Streamlined pad with serviceable wear tiles extends pad life

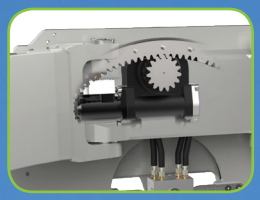

High-torque, heavy-duty rotator drivetrain for demanding applications

APPLICATIONS

Suitable for mills, stevedores and shippers of large rolls of packaging paper of all types. It is also the base clamp for the jumbo tissue roll industry.

FEATURES

- Highly durable arm structure and pad profile that eliminates damage from knifing between rolls in containers, trailers, and railcars.
- Pad protectors reduce wear to the contact pads.
- Pad alignment system using dual spring technology holds the contact pads in proper alignment.
- A variety of arm styles for flexibilty in any application.
- Short arm positioning to optimize small roll handling.
- Excellent visibility through arms.
- High-flow revolving connection provides fast arm speed and longer battery life on electric trucks and less fuel consumption on internal combustion trucks.
- Quick 360º rotation speed with 15-tooth pinion.
- High-torque, heavy-duty rotator drivetrain proven to provide superior durability.
- Can be configured with 2, 3 or 4 pads.
- High-strength castings provide structural life needed for robust applications.

OPTIONS

- Wide range of contact pads for every type of paper.
- Split or solid arm.
- Fixed short arm for applications with roll sizes on the high side of the clamp's capacity range.
- 180° Stop Group.
- AFC - Adaptive Force Control.
- HFC™ - Hydraulic Force Control.
- ERC - Electronic Rotational Control.

34H PAPER ROLL CLAMP

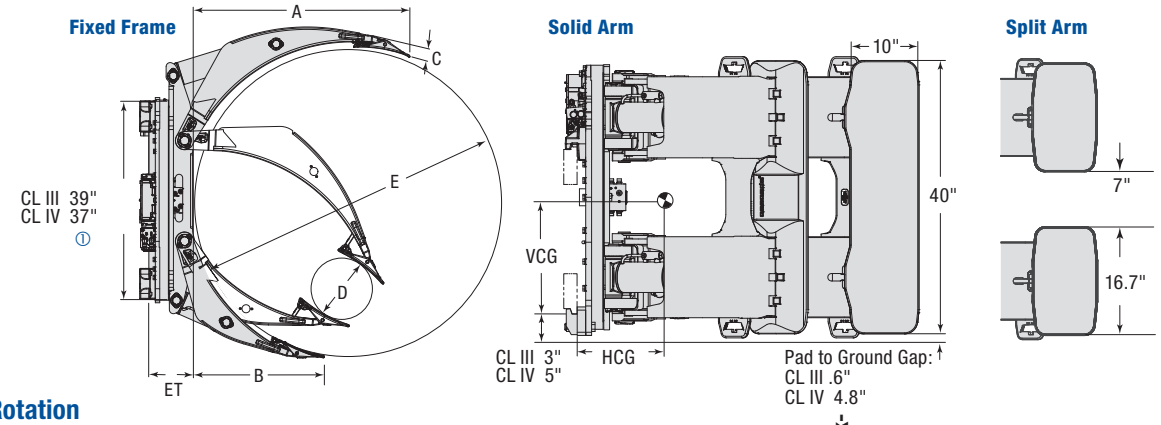

360º Rotation

Catalog Order No.	Capacity@ Load Center lbs@in	kg@mm	Roll Range D - E	Mtg. Class	Mtg. Angle ②	Weight lbs	kg	Effective Thick-ness ET	Horizontal Ctr. of Gravity HCG	Vertical Ctr. of Gravity VCG	Long Arm Length A	Short Arm Length B	Long Arm Thickness C
Fixed Frame/Positioned Short Arm/Split Long Arm													
34H-RCP-3A-0015	7,940@25.6"	3600@650	8"-51"	III	0°	2,092	949	8.2"	11.2"	17.4"	35.7"	22.6"	1.8"
34H-RCP-3A-0020	7,720@27.6"	3500@700	8"-55"	III	0°	2,122	962	8.2"	11.7"	17.4"	37.7"	24.6"	1.8"
34H-RCP-3A-0025	7,500@30.0"	3400@762	8"-60"	III	0°	2,172	985	8.2"	12.4"	17.4"	40.0"	27.0"	1.8"
34H-RCP-3A-0030	7,150@31.5"	3250@800	8"-63"	III	0°	2,247	1,019	8.2"	12.8"	17.4"	41.5"	28.5"	1.8"
34H-RCP-3A-0035	6,250@36.0"	2850@915	8"-72"	III	0°	2,330	1,057	8.2"	13.9"	17.4"	46.4"	32.5"	1.8"
34H-RCP-4A-0015	7,940@25.6"	3600@650	8"-51"	IV	0°	2,090	948	8.0"	11.1"	19.6"	35.7"	22.6"	1.8"
34H-RCP-4A-0020	7,720@27.6"	3500@700	8"-55"	IV	0°	2,120	962	8.0"	11.6"	19.6"	37.7"	24.6"	1.8"
34H-RCP-4A-0025	7,500@30.0"	3400@762	8"-60"	IV	0°	2,170	984	8.0"	12.3"	19.6"	40.0"	27.0"	1.8"
34H-RCP-4A-0030	7,150@31.5"	3250@800	8"-63"	IV	0°	2,245	1,019	8.0"	12.7"	19.6"	41.5"	28.5"	1.8"
34H-RCP-4A-0035	6,250@36.0"	2850@915	8"-72"	IV	0°	2,328	1,056	8.0"	13.8"	19.6"	46.4"	32.5"	1.8"
Fixed Frame/Positioned Short Arm/Solid Long Arm													
34H-RDP-3A-0015	7,940@25.6"	3600@650	8"-51"	III	0°	2,069	939	8.2"	10.9"	17.4"	35.7"	22.6"	1.8"
34H-RDP-3A-0020	7,720@27.6"	3500@700	8"-55"	III	0°	2,111	958	8.2"	11.4"	17.4"	37.7"	24.6"	1.8"
34H-RDP-3A-0025	7,500@30.0"	3400@762	8"-60"	III	0°	2,161	980	8.2"	12.1"	17.4"	40.0"	27.0"	1.8"
34H-RDP-3A-0030	7,150@31.5"	3250@800	8"-63"	III	0°	2,225	1,009	8.2"	12.4"	17.4"	41.5"	28.5"	1.8"
34H-RDP-3A-0035	6,250@36.0"	2850@915	8"-72"	III	0°	2,319	1,052	8.2"	13.5"	17.4"	46.4"	32.5"	1.8"
34H-RDP-4A-0015	7,940@25.6"	3600@650	8"-51"	IV	0°	2,067	938	8.0"	10.8"	19.6"	35.7"	22.6"	1.8"
34H-RDP-4A-0020	7,720@27.6"	3500@700	8"-55"	IV	0°	2,109	957	8.0"	11.3"	19.6"	37.7"	24.6"	1.8"
34H-RDP-4A-0025	7,500@30.0"	3400@762	8"-60"	IV	0°	2,159	979	8.0"	12.0"	19.6"	40.0"	27.0"	1.8"
34H-RDP-4A-0030	7,150@31.5"	3250@800	8"-63"	IV	0°	2,223	1,008	8.0"	12.3"	19.6"	41.5"	28.5"	1.8"
34H-RDP-4A-0035	6,250@36.0"	2850@915	8"-72"	IV	0°	2,317	1,051	8.0"	13.4"	19.6"	46.4"	32.5"	1.8"

① Dimension is the widest spread of either upper or lower hook.

② 2° mounting available, consult Cascade.

▶ All models can be configured with a fixed short arm. Consult Cascade for model number and specifications.

▶ 0º mounting is suitable for general applications with primarily vertical roll handling. 0º mounting must be used when stacking above 220".

▶ Rubber or Urethane coatings increase the pad thickness. For frequent bilge operations, a 2° mounting is recommended.

▶ Model shown is with Herringbone contact pads. Other pad options are available, consult Cascade.

▶ Auxiliary pressure protection is required for the rotator section unless the option was specified at the time of the order. Contact your Cascade representative for details.

HYDRAULIC FLOW & PRESSURE

Model	Maximum Clamp & Rotate Operating Pressure (psi)	Maximum Deliverable Truck Pressure (psi)	Clamp Circuit Pressure Protected Yes/No?	Rotator Circuit Pressure Protected Yes/No?	Number of Functions	Flow Clamp Min-Rec-Max Function 1 / gpm
34H	2300	2300	No	No	2	10 - 15 - 20

ROTATOR SPECIFICATIONS

Model	RPM	Recommended Flow GPM	Torque in-lbs@2300 psi
34H	4.8	15	106,000

▶ If the maximum deliverable truck pressure exceeds maximum clamp or rotate operating pressure and the attachment is not pressure protected, then auxiliary pressure protection is required.

Cascade Corporation • PO Box 20187 • Portland, OR 97294-0187 • USA • 800 CASCADE (227.2233) • Tel 503.669.6257 • Fax 800.693.3768 • Fax 503.669.6367
Cascade Canada Ltd. • 5570 Timberlea Blvd. • Mississauga, Ontario L4W 4M6 • Canada • 800.380.2272 • Tel 905.629.7777 • Fax 905.629.7785

Cascade is a registered trademark of Cascade Corporation.
© Cascade Corporation 2017. All rights reserved.

www.cascorp.com